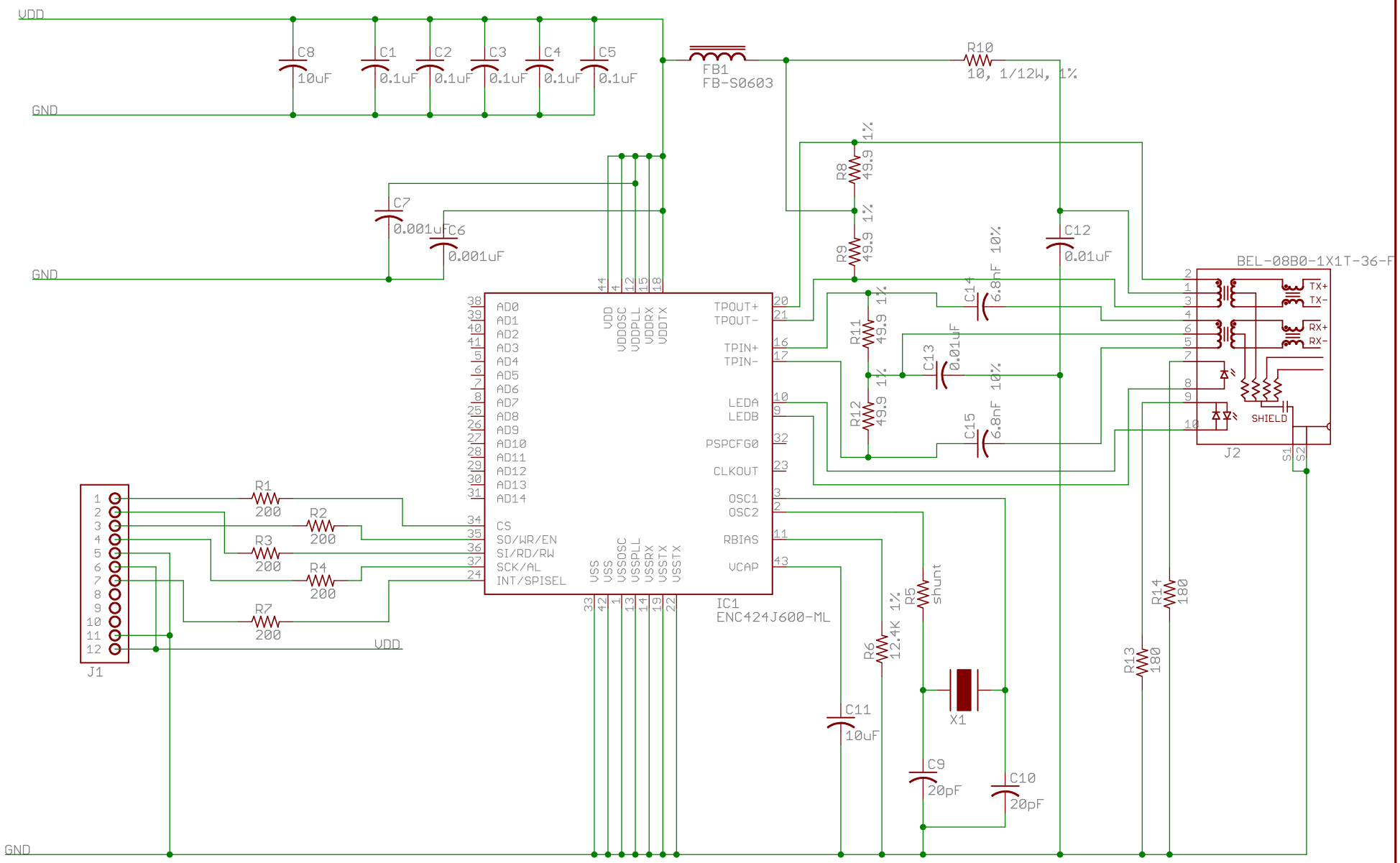

Digilent PmodNIC100

Copyright 2011, Digilent INC.

		Engineer: NEA
SHEET:		Author: PJA
TITLE: PmodNIC100		Rev: A
Doc#: 500-208	Date: 01/24/2011	Sheet: 1/1

WEEE ROHS CHINA