2.5: Practical Voltage and Current Measurement

Overview:

Theoretical models of electrical circuits often assume that we can determine voltages and currents within the circuit without affecting the circuit's operation. In reality, any time we measure a voltage or current, we alter the circuit's behavior to some extent – sometimes the effects of the measurement process can be very significant. In this lab assignment, we will experimentally explore the behavior of non-ideal meters. The experiments in this assignment illustrate the effects of non-ideal voltage measurements.

Before beginning this lab, you should be able to:

- State Ohm's law
- Determine the equivalent resistance of series and parallel resistive networks
- State the voltage divider and current divider formulae
- Use a digital mulitmeter to measure resistance, voltage, and current
- Use the Analog Discovery's waveform generator to apply constant voltages
- Use the Analog Discovery voltmeter to measure a constant voltage
- Model non-ideal sources

After completing this lab, you should be able to:

- Estimate a voltmeter's internal resistance
- Describe qualitatively the effects of voltmeter internal resistances on voltage measurements

This lab exercise requires:

- Analog Discovery
- Digilent Analog Parts Kit
- Digital multimeter

Symbol Key:

DEMO — Demonstrate circuit operation to teaching assistant; teaching assistant should initial lab notebook and grade sheet, indicating that circuit operation is acceptable.

ANALYSIS — Analysis; include principle results of analysis in laboratory report.

SIM — Numerical simulation (using PSPICE or MATLAB as indicated); include results of MATLAB numerical analysis and/or simulation in laboratory report.

DATA — Record data in your lab notebook.

General Discussion:

Very large resistors are used in the voltage divider circuit of Figure 1. Due to these large resistances, measurement of the voltage V_{out} will likely result in measurement errors due to non-ideal voltmeter effects.

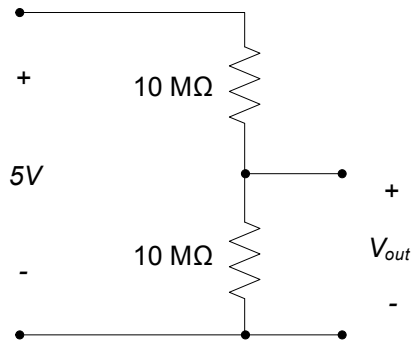

Figure 1. Circuit schematic.

Pre-lab:

ANALYSIS

Analyze the circuit of Figure 1 to determine an expected value for the measured voltage V_{out} for the cases in which

a) The measurement of V_{out} is determined using an ideal voltmeter (a voltmeter with infinite internal resistance), and
b) The measurement of V_{out} is determined using a voltmeter with internal resistance R_M. (In this case, your result will be a formula which depends upon R_M.)

Hint – non-ideal voltmeters:

Per section 2.5 of the text, a voltmeter can be modeled as an equivalent resistance R_M in parallel with the voltage being measured. Thus, the circuit of Figure 1, with the voltmeter resistance included, becomes as shown in the figure to the left below. The parallel combination of the voltmeter and the 10MΩ resistor can then be represented as a single equivalent resistance R_{eq} as shown in the figure to the right below, where

$$R_{eq} = \frac{(R)(R_M)}{R + R_M}$$

Therefore,

$$V_{OUT} = 5V\left(\frac{R_{eq}}{R + R_{eq}}\right)$$

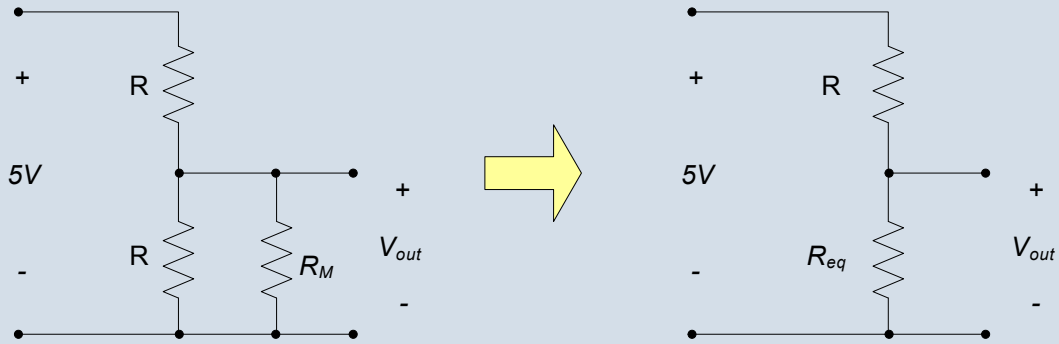

From the above, it can be seen that if $R >> R_M$, $R_{eq} \approx R$ and the measured V_{out} will be essentially the same as the V_{out} indicated in Figure 1. If, however, this condition is not true, the voltmeter's internal resistiance can have a significant (and generally undesirable) effect on the voltage being measured.

Lab Procedures:

DATA a) Construct the circuit of Figure 1. Measure the voltage V_{out} using your DMM. Using your pre-lab results, estimate the internal resistance of the voltmeter.

DEMO b) Demonstrate operation of your circuit to the Teaching Assistant. Have the TA initial the appropriate page(s) of your lab notebook and the lab checklist.

DATA c) Repeat the test of part (a), except use the voltmeter on your Analog Discovery module to measure V_{out}. Using your pre-lab results, estimate the internal resistance of the scope instrument.

Note:

- This is not a good way to get an accurate estimate of the internal resistance of the voltmeter, but it should give you an idea of the overall concepts involved.
- It is likely that the Analog Discovery internal resistance will be significantly lower than the internal resistance of most commercially available DMMs. This is at least partly due to the fact that the Analog Discovery is primarily intended for making time-varying measurements, while DMMs are intended to measure constant values.