# 1.2.1: Independent Power Supplies, Ammeters, and Voltmeters

## Overview:

The purpose of this lab assignment is to provide users with an introduction to some of the equipment which will be used in the next few lab assignments. The following topics are discussed:

- Power supplies
- Use a digital multimeter (DMM) to measure voltage and current

**Before beginning this lab, you should be able to:**

- State how to use a DMM to measure voltage and current (see related material relative to DMMs)
- Write symbols for independent voltage and current sources
- State the purpose of independent voltage and current sources

**After completing this lab, you should be able to:**

- Use a digital multimeter to measure voltage and current
- Use the Analog Discovery voltmeter to measure a constant voltage
- Use the Analog Discovery power supplies to provide a constant voltage to a circuit

**This lab exercise requires:**

- Analog Discovery
- Digilent Analog Parts Kit
- Digital multimeter

## Symbol Key:

DEMO — Demonstrate circuit operation to teaching assistant; teaching assistant should initial lab notebook and grade sheet, indicating that circuit operation is acceptable.

ANALYSIS — Analysis; include principle results of analysis in laboratory report.

SIM — Numerical simulation (using PSPICE or MATLAB as indicated); include results of MATLAB numerical analysis and/or simulation in laboratory report.

DATA — Record data in your lab notebook.

## General Discussion:

Consider the circuit shown schematically in Figure 1(a). A DC voltage supply of 5V is connected between nodes a and c to provide power to the circuit. We want to know the current, i, out of the power source, and the voltage across the open circuit, $v_{bc}$. Since there is an open circuit between nodes b and c, we will expect no current to flow through the circuit (i = 0 A) and the voltage difference between nodes b and c should be the same as the voltage applied to the circuit ($v_{bc}$ = 5 V).

The schematic of Figure 1(b) shows the same circuit, with the measurements which will be made explicitly indicated. A DMM is connected between nodes a and b to measure the current i. We will use one oscilloscope channel, connected across nodes b and c to measure the voltage $v_{bc}$. (Since the voltage $v_{bc}$ will be a constant value, it is not absolutely necessary to measure this value using an oscilloscope. It would be more common to use a DMM to measure the voltage $v_{bc}$, if one were available.) You may need to use a combination of jumper wires and connectors with alligator clips to make the connections between the breadboard and the DMMs and power supplies.

## Notes:

- A DMM, used as an ammeter, behaves approximately as a short circuit.
- A DMM or oscilloscope, used to measure voltage, behaves approximately as an open circuit.

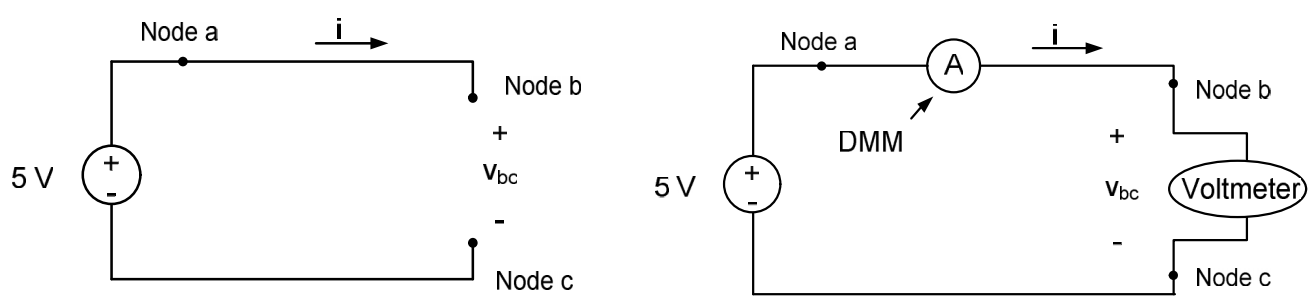


*(a)* *(b)*

*Figure 1. Circuit schematic.*

## Note:

Constant voltages are commonly measured using DMMs. However, it is easy to use the Analog Discovery Voltmeter instrument to perform this task. The Analog Discovery Voltmeter allows measurement of up to two voltages simultaneously on two different channels. Probes used by the Voltmeter are labeled as **1+** and **1-** (positive and negative terminals for the channel 1 voltage) and **2+** and **2-** (positive and negative terminals for the channel 2 voltage) on the Analog Discovery. Usage of the Voltmeter is briefly discussed below:

- Connect the probes of the desired voltmeter channel to the appropriate nodes of your circuit.
- Click on the 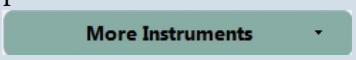

icon on the WaveForms main window and select Voltmeter from the resulting drop-down menu. A Voltmeter window should open.
- Make sure that the Voltmeter is enabled – it the checkmark next to 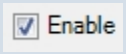

is not selected, click on it now[1].
- The measured constant voltages for both channels are displayed in the 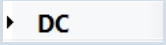

row on the Voltmeter window[2]. If the probes for a channel are not connected to a circuit, the Voltmeter reading should be approximately zero for that channel.

The above process can be applied rather automatically, as long as the voltage being measured is constant. We will examine the measurement of voltages, which vary with time in later projects.

## Pre-lab: None

[1] The Voltmeter instrument and Scope instruments share the same set of probes. If the Voltmeter instrument is enabled, the Scope instrument is disabled. Disabling the Voltmeter instrument enables the Scope instrument.

[2] The rows labeled **True RMS** and **AC RMS** are used for measuring voltages which change as a function of time. We'll discuss these measurements in later lab assignments.

## Lab Procedures:

DATA 1. Connect the circuit shown in Figure 1(b) <u>except</u> do not connect the power supply to the circuit. Use your DMM to perform the current measurement and channel 1 of your voltmeter to measure the voltage $v_{bc}$. Note in your lab notebook the voltage and current with no power supplied to the circuit.

2. Use VP+ on the Analog Discovery to apply the 5V source to the circuit. Turn the power supply on.

DATA 3. Measure the voltage $v_{bc}$ and the current i. Note your results in your lab notebook. Do your results agree with your expectations? What is the approximate power generated or absorbed by the power source?

DATA 4. Turn off the power supply, reverse the leads on the voltmeter, turn the power supply back on, and note the resulting voltage and current measurements in your lab notebook. Do the results agree with your expectations? Why or why not? Comment on the agreement (or lack thereof) between your voltage and current measurements in your lab notebook.

DEMO 5. Demonstrate operation of your circuit to the Teaching Assistant. Have the TA initial the appropriate page(s) of your lab notebook and the lab checklist.